MALE END VIEW	FEMALE END VIEW	FEMALE END VIEW
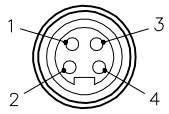	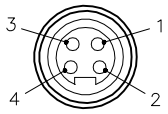	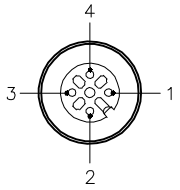
mini fast. FOUNDATION™ fieldbus	mini fast. FOUNDATION™ fieldbus	euro fast. FOUNDATION™ fieldbus

SPECIFICATIONS

CONTACT CARRIER MATERIAL	TPU OR NYLON
MOLDED HEAD MATERIAL/COLOR	TPU/YELLOW
CONTACT MATERIAL/PLATING	BRASS/GOLD
COUPLING NUT MATERIAL/FINISH	STAINLESS STEEL/PASSIVATED
RATED CURRENT [A]	4.0 A
RATED VOLTAGE [V]	250 V
TEMPERATURE RATING	−40˚C TO +55˚C (−40˚F TO 131˚F)
PROTECTION CLASS	MEETS NEMA 1,3,4,6P AND IEC IP67

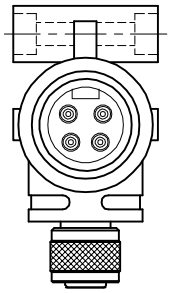

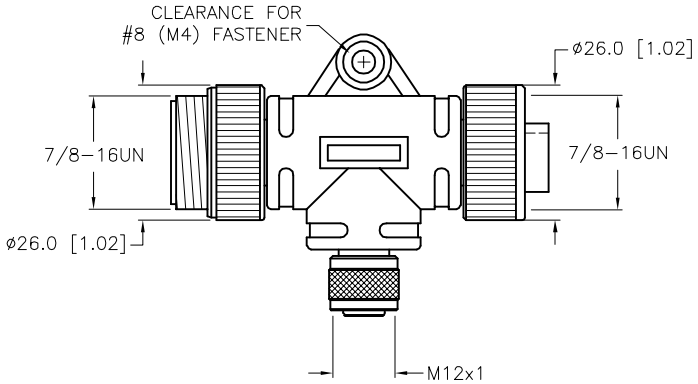

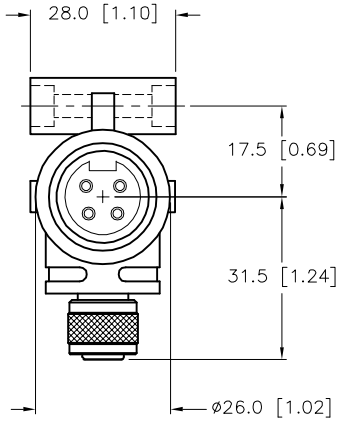

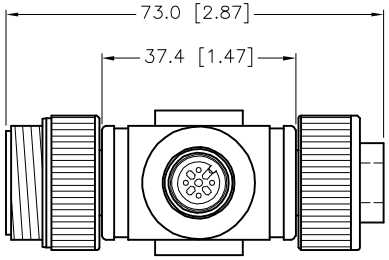

WIRING DIAGRAM

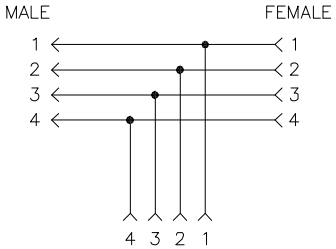

SOURCE DRAWING - FOR REFERENCE ONLY

RELATED DOCUMENTS
1. RSV−2RKV 40 (U2385−4)
2. RSM−2RKM 49 (U0140−0)
3. 9−RDV−099
4.

3RD ANGLE PROJECTION

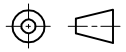

THIS DRAWING IS CONFIDENTIAL AND THE PROPERTY OF TURCK INC. USE OF THIS DOCUMENT WITHOUT WRITTEN PERMISSION IS PROHIBITED.

TURCK

3000 CAMPUS DRIVE
MINNEAPOLIS, MN 55441
1−800−544−7769
(763) 553−7300
(763) 553−0708 fax
www.turck.us

MATERIAL

FINISH

ALL DIMENSIONS DISPLAYED ON THIS DRAWING ARE FOR REFERENCE ONLY

CONTACT TURCK FOR MORE INFORMATION

DRFT	RDS
DATE	07/09/04
APVD	GC
SCALE	1=1.5

UNIT OF MEASUREMENT

MILLIMETER [INCH]

DO NOT SCALE THIS DRAWING

DESCRIPTION: RSV FKV RKV 49

IDENTIFICATION NO.: U2264−6

REV: D

FILE: U2264−6

SHEET 1 OF 1

REV	DESCRIPTION	BY	DATE	ECO NO.
D	DRAWING PROCESSED AS PART OF ECO 33971	CBM	04/07/11	33971